WINSTONE CONVEY
Bulk Material Handling Components



PRODUCT COLLECTION / 2026

BULK MATERIAL HANDLING

COMPONENTS & MAINTENANCE PARTS

Winstone Industrial Tech Co., Ltd.

info@winstoneglobal.com

www.winstoneconvey.com

AI-generated application scene. Illustrative product collection.

01 Belt conveyor rollers

Support the carrying and return runs.



Carrying rollers

Steel roller bodies for carrying-side configurations.

Return rollers

Plain steel or disc-type configurations for return runs.

Impact rollers

Rubber-ring designs for loading-zone applications.

Troughing idler sets

Multi-roll assemblies with matched frames and mounting points.

Guide & specialty rollers

Guide, spiral-return and polymer-body roller configurations.

Replacement discs

Rubber and polyurethane rings for roller maintenance.

SELECTION DETAILS

Roller diameter and face length / shaft ends / load / belt speed / sealing / operating environment

AI-generated product illustration.

02 Pulleys & drive components

Define the assembly around load and interface.

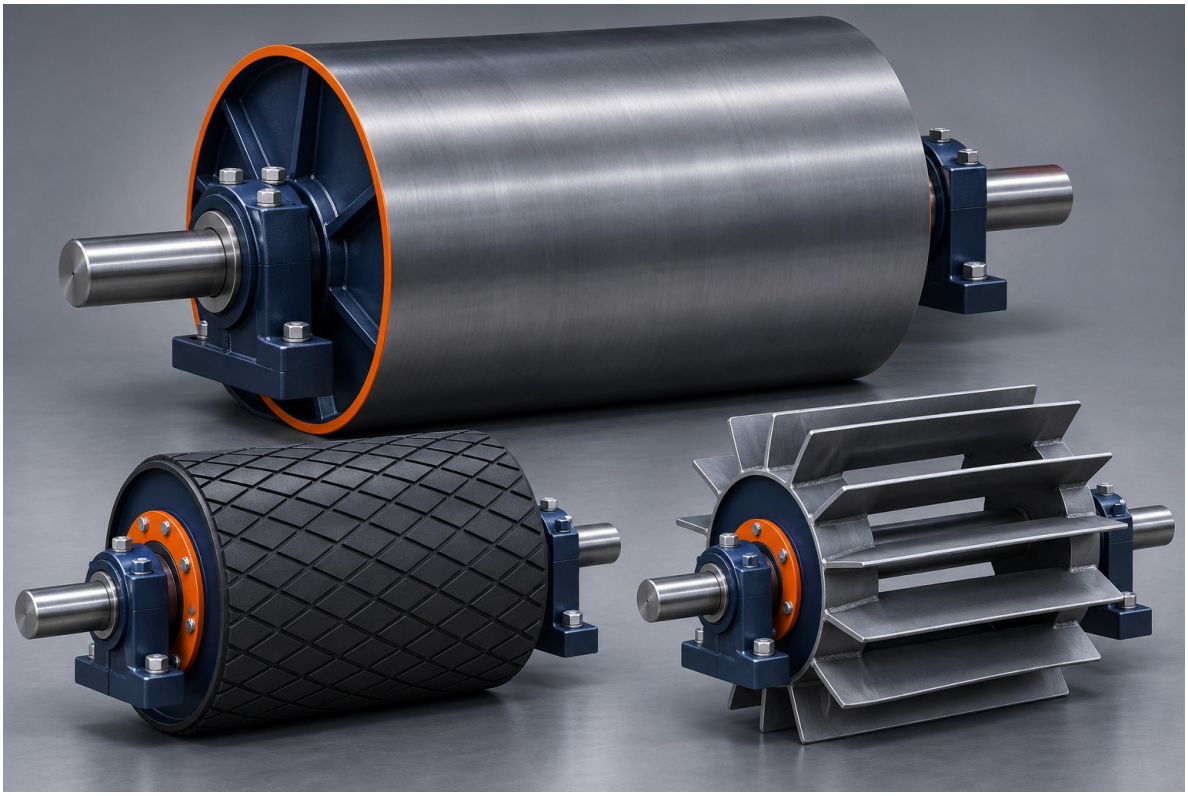

Drive pulleys

Drum, shaft and connection details selected as one assembly.

Tail & bend pulleys

Return and belt-routing positions with drawing-based interfaces.

Take-up pulleys

Pulley assemblies matched to the tensioning arrangement.

Wing pulleys

Open-wing structures for material shedding at the pulley.

Pulley lagging

Rubber and ceramic-rubber lagging material options.

Shafts & locking components

Machined shafts, hubs and locking arrangements to drawing.

SELECTION DETAILS

Belt tension / wrap angle / face width / shaft drawing / bearing centres / lagging / speed

AI-generated product illustration.

03 Screw conveyor components

Build a clear specification for every interface.

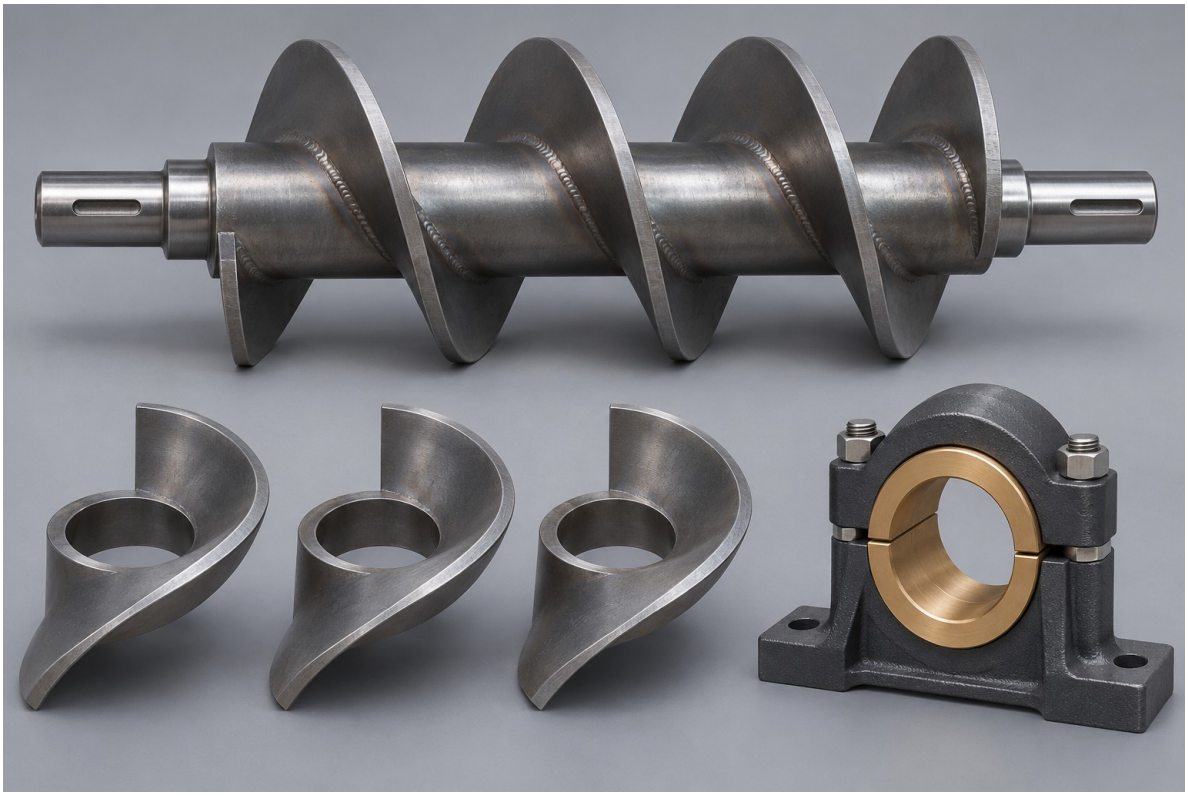

Sectional & helicoid flights

Specify outside and inside diameters, pitch and handedness.

Shafts & coupling parts

Drive, end and coupling shafts with matching connections.

Hangers & plain bearings

Separate frame geometry from bearing material selection.

End seals & packing glands

Select for shaft size, material, temperature and duty.

Troughs, ends & covers

Drawing-based housings, end plates and removable covers.

Clamps, bolts & gaskets

Matched fastening and sealing components for assembly.

SELECTION DETAILS

Bulk material / diameter / pitch / flight thickness / rotation / torque / temperature / interfaces

AI-generated product illustration.

04 Belt maintenance components

Cleaning, sealing and support at transfer points.



Primary & secondary cleaners

Cleaner position and configuration matched to belt conditions.

Replacement blades

Replacement scraper profiles and mounting configurations.

Skirting & clamp systems

Rubber or polyurethane strips with compatible mounting parts.

Impact bars & support bars

Replaceable bars with defined profiles and attachment details.

Plows & tensioner parts

Pulley-protection plows and cleaner adjustment components.

Tracking assemblies

Tracking assemblies for conveyor belt alignment.

SELECTION DETAILS

Belt width / speed / direction / splice type / pulley diameter / temperature / mounting space

AI-generated product illustration.

05 Feeder replacement parts

Components for apron and vibratory feeder applications.

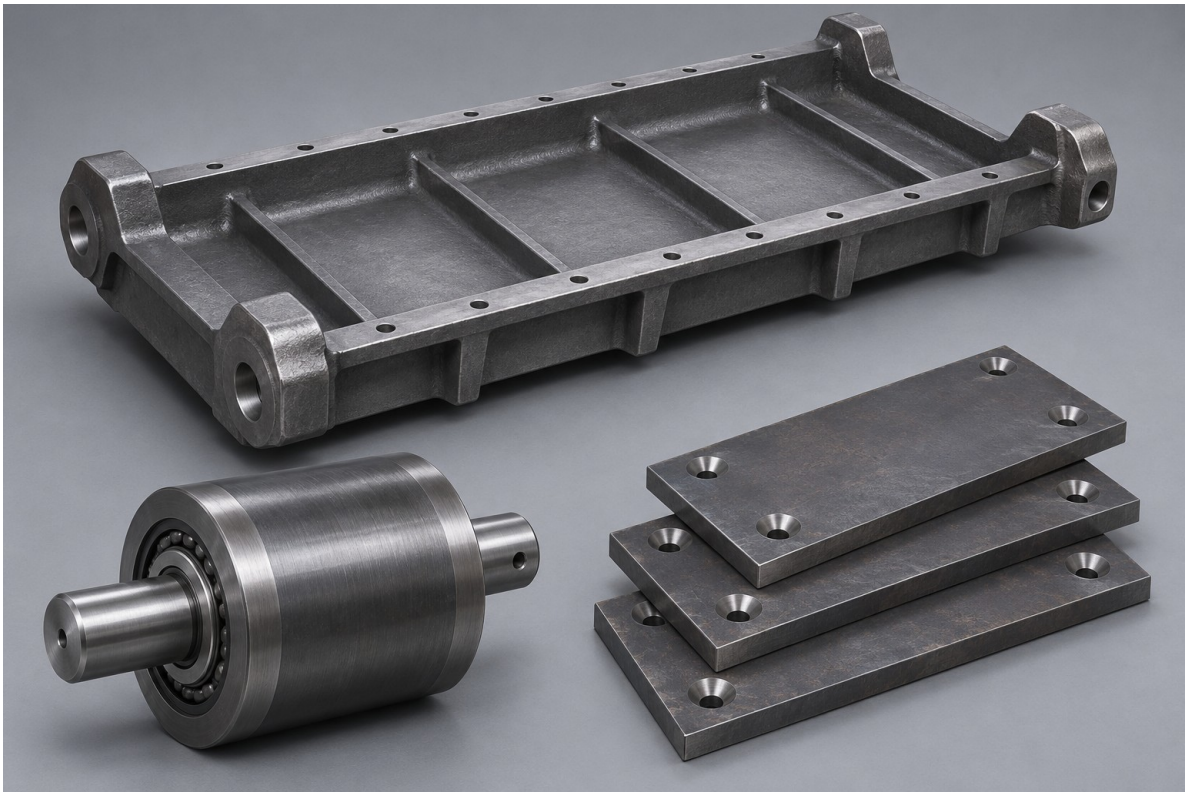

Apron feeder carry rollers

Heavy-duty undercarriage-style components to machine drawing.

Apron feeder return rollers

Roller and mounting details matched to the installed feeder.

Pans & flights

Feeder pans and flights with defined pitch and attachment interfaces.

Sprockets & chain interfaces

Sprockets and matched chain-interface components.

Tray & feeder liners

Replaceable wear surfaces for an identified feeder location.

Vibratory feeder parts

Model-specific tray, wear and mounting components.

SELECTION DETAILS

Feeder type / make and model / drawing or sample / material / load / pitch / attachment points

AI-generated product illustration.

06 Transfer chutes & wear liners

Select the lining for the wear mechanism.

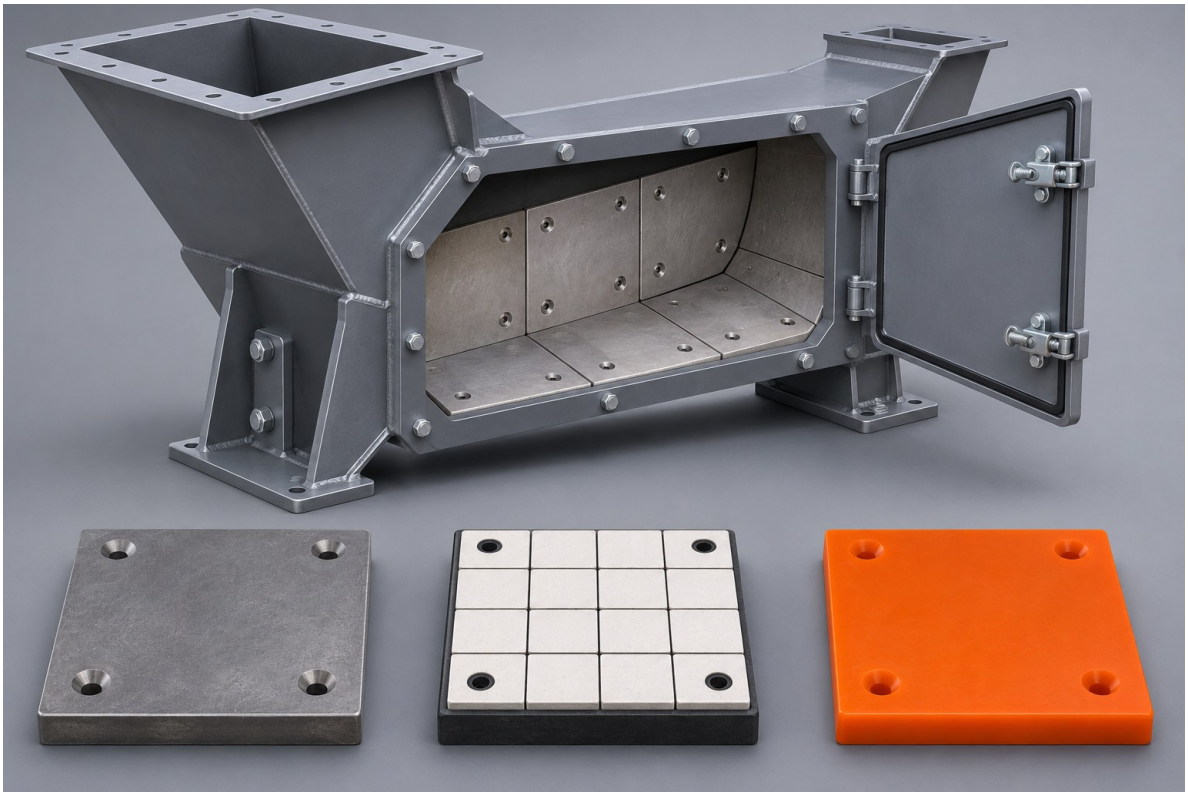

Chute & hopper liners

Position-specific replacement panels with mounting maps.

Wear steel liners

Material grade and thickness selected for the application.

Rubber & polyurethane liners

Rubber and polyurethane panels in application-specific profiles.

Ceramic-rubber panels

Composite panels for suitable wear and impact conditions.

UHMWPE liners

Polymer liners for material-contact surfaces.

Fasteners & inspection doors

Matched fixing hardware and access-door components.

SELECTION DETAILS

Particle size / drop height / impact angle / moisture / temperature / panel drawing / fastening

AI-generated product illustration.

07 Frames & mounting assemblies

Match every support to the installed conveyor.

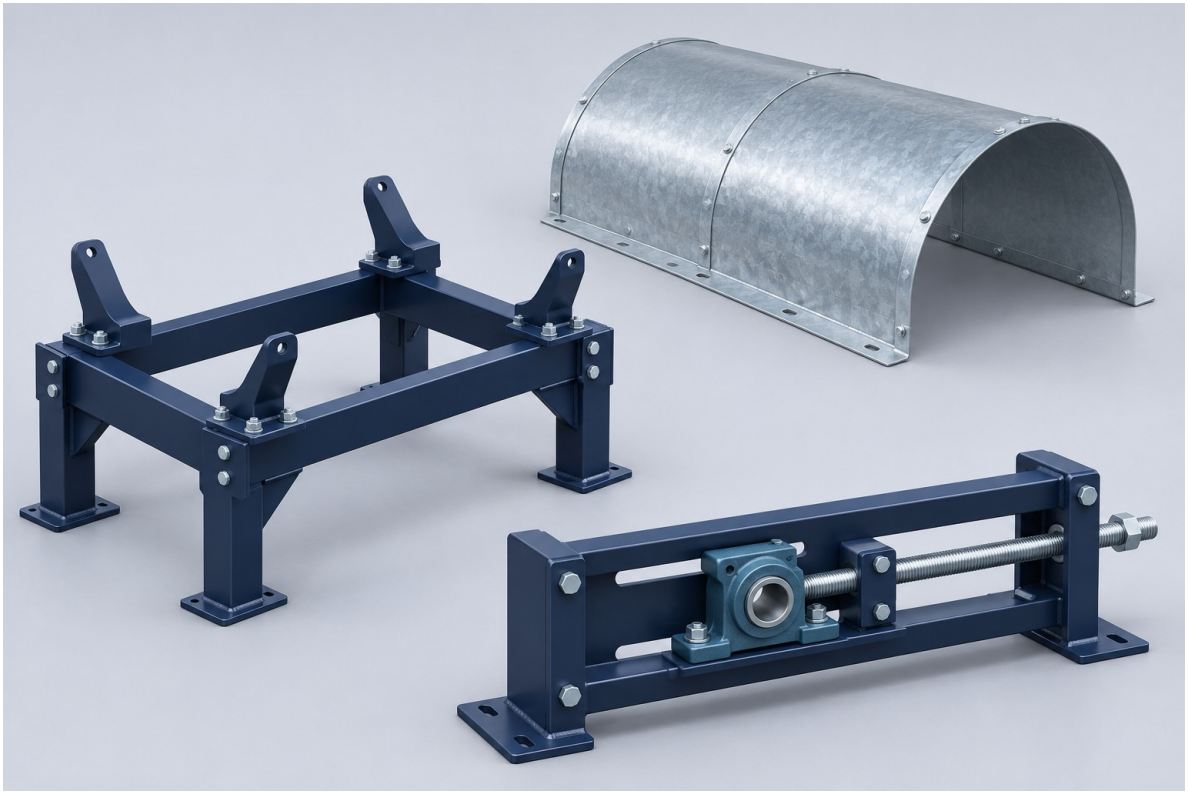

Roller brackets & crossmembers

Drawing-based mounts for individual rollers and idler sets.

Conveyor frame sections

Fabricated sections with defined connection and support points.

Screw take-up frames

Adjustment rods and sliding mounts sized for the duty.

Retractable idler frames

Retractable support arrangements for maintenance access.

Conveyor covers

Cover sections and mounting brackets to site dimensions.

Return roller guards & catchers

Guarding and roller-retention components for conveyor structures.

SELECTION DETAILS

Mounting centres / load / adjustment travel / steel grade / finish / access / installation drawing

AI-generated product illustration.

08 Maintenance packages

Group compatible parts around a planned replacement job.

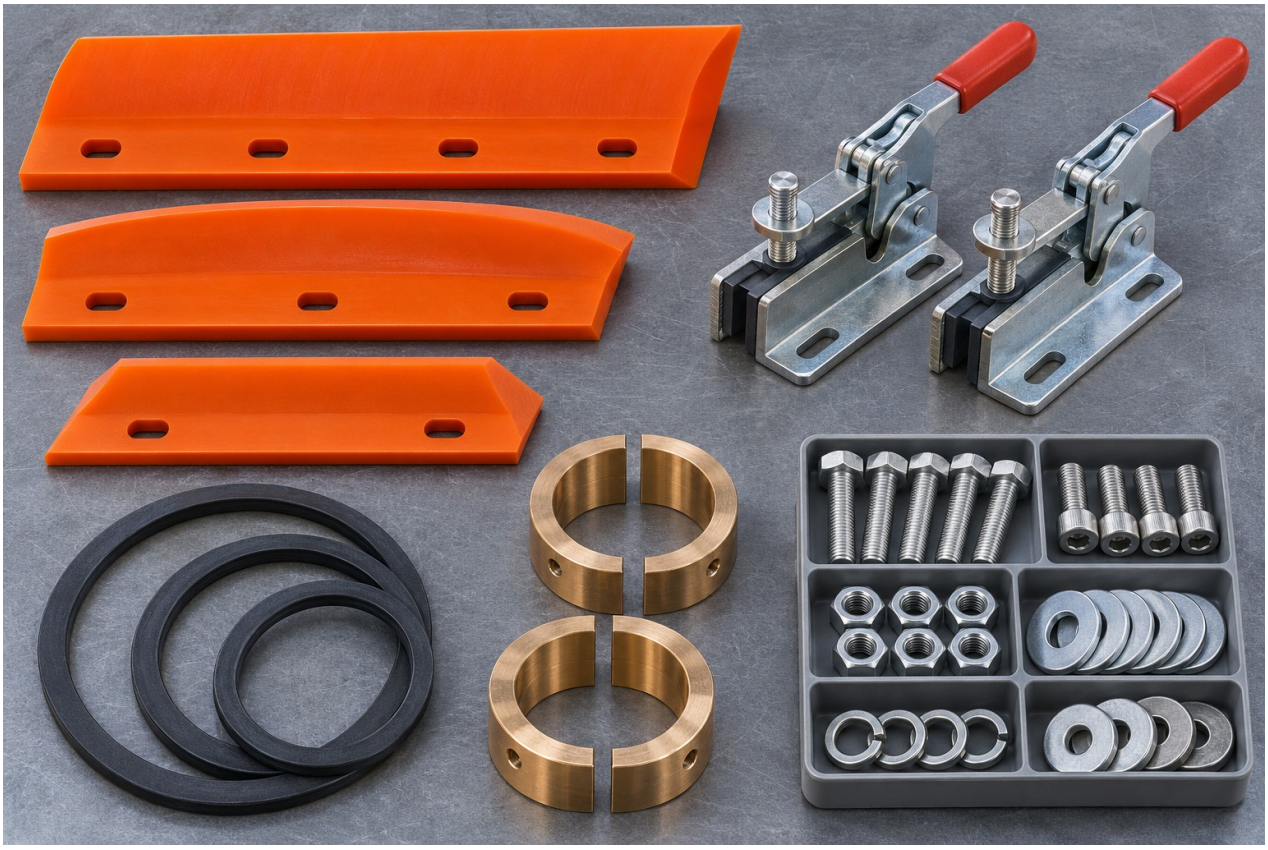

Skirting package

Sealing strips, clamps, mounting rails and fastening hardware.

Cleaner service package

Replacement blades, tensioner parts and mounting components.

Screw service package

Matched hanger bearings, coupling bolts, shaft seals and gaskets.

Liner replacement package

Position-marked panels, fixing hardware and installation layout.

Bring related maintenance components together around the equipment drawing and replacement task.

AI-generated product illustration.

09 Our brand story

WINSTONE CONVEY | Moving industry forward.



AI-generated facility concept; not a photograph of company premises.

Behind every moving belt is a network of components working together. WINSTONE CONVEY takes its inspiration from that continuity: the rollers that support the load, the pulleys that guide its path and the wear parts that protect each transfer point.

Our focus is clear: bulk material handling components and maintenance parts. From belt conveyors to screw conveying and feeder applications, the brand brings a practical, application-led perspective to the details that connect a system.

The twin paths of our W symbol represent continuous movement and connection. Deep navy expresses a grounded industrial character; orange highlights the energy of material in motion.

AI-generated facility concept illustration.

10 The details that connect

Machining, fabrication and assembly - illustrated.



AI-generated workshop concept; not a photograph of company premises.

Interface by interface

Shaft ends, bearing seats and mounting centres connect each component to the system.

Material by application

Wear surfaces, contact conditions and operating environments shape material selection.

Maintenance in mind

Replacement parts, accessible connections and clear identification support maintenance planning.

AI-generated workshop concept illustration.

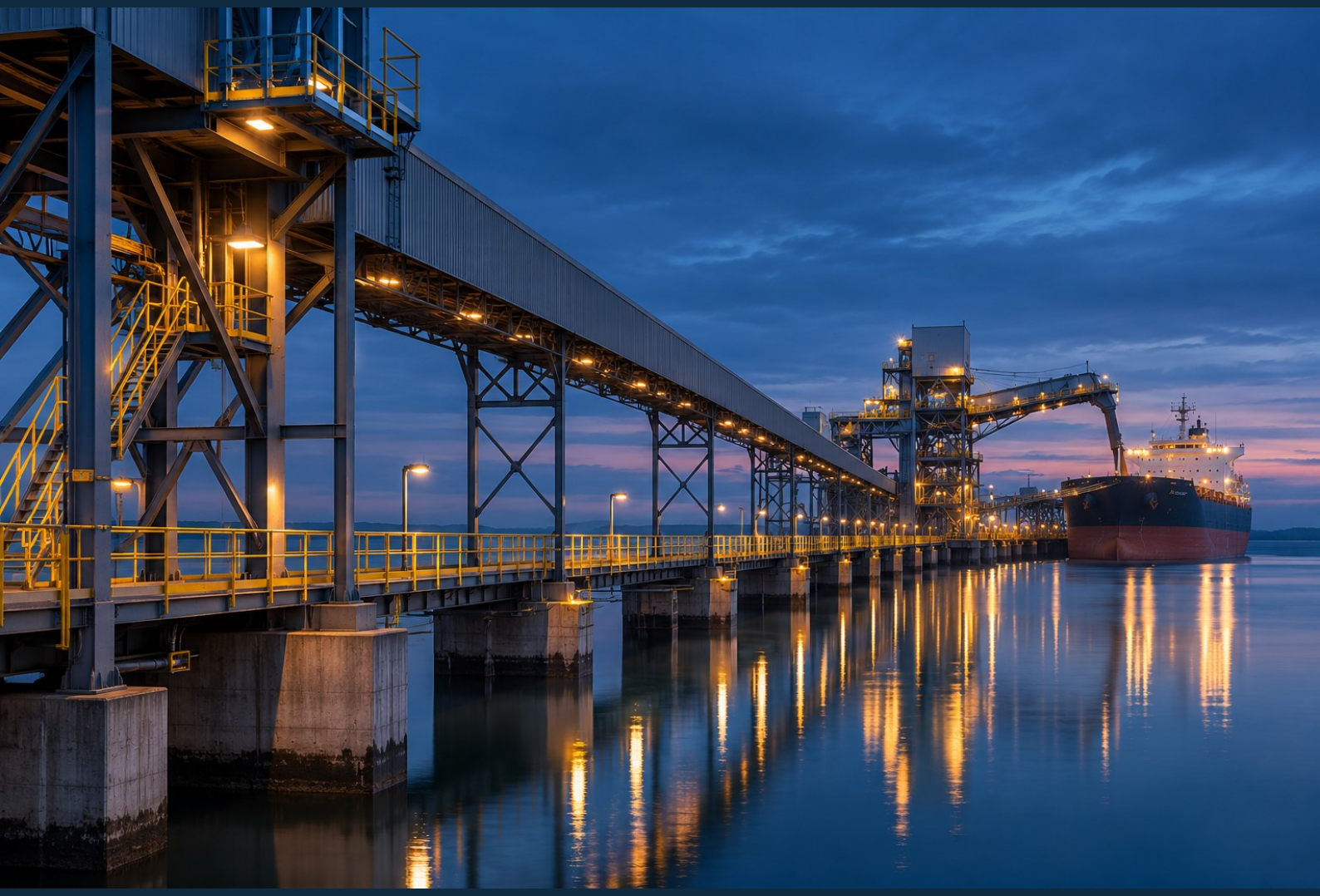

WINSTONE CONVEY

Bulk Material Handling Components

Winstone Industrial Tech Co., Ltd.

WEBSITE

www.winstoneconvey.com

EMAIL

info@winstoneglobal.com

WHATSAPP

+86 158 6784 1246

ADDRESS

Room 35A04, Tower A, Ningbo Center,
Yinzhou District, Ningbo, Zhejiang, China

Share your product list, drawings, operating conditions and quantity with our team.

AI-generated application scene.